AP Calculus AB - 2010 Name_____

Chp 2 - Part 3 *Applications Review* *Team # _____ Due*

1. Given $v(t)=\left(6x^2-4\right)^3\cot(5x)$, the instantaneous rate of change. ***State answer in factored form.***

2. You are standing at the corner of Lawrence Ave. and Western Ave. and you hear a Brown Line elevated train approaching Western at 51 feet per second. A diagonal alley crosses under the elevated track 175 ft beyond Western. As your eyes follow the train you wonder "at what rate is the angle between my line of sight and Western Ave (θ) changing at the instant the train passes the alley?".
Your answer should be in radians/second.

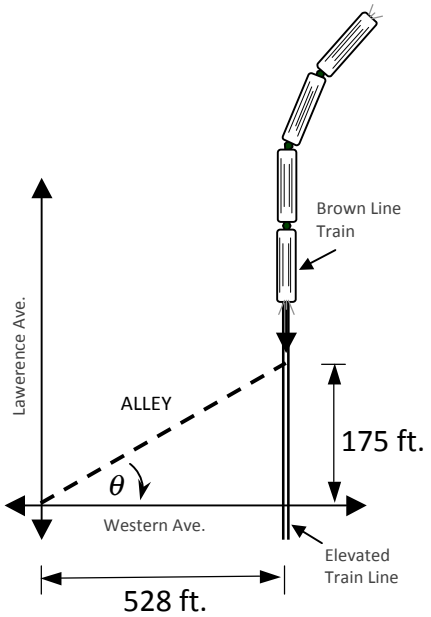

3. The area of a rectangle is changing at 20 cm^2/s, and its length is increasing at 3 cm/s. Find the rate of change in the width, when the area is 50 cm^2 and when the length is 15 cm.

4. The rate of change in the area of the base of a cone is 3π in^2/min, and the rate of change in the height of the cone is 8 in/min. At this instant, find the rate of change in the area of the base with respect to its height.

5. a. Sketch the region bounded by y-axis, $y = 2x$, and $y = k$, $k > 0$.

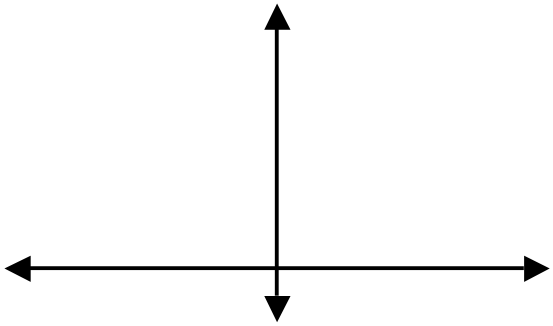

b. If the region is rotated about the y-axis, find the volume of the generated solid as a function of k.

c. If k increases at $\frac{1}{2}\,ft/\sec$, find the rate of change in volume at the instant $k = 4$.

6. Which of the following functions satisfy the hypotheses of Rolle's Theorem on the interval $[-1, 4]$?

a. $f(x) = \dfrac{x^2+1}{x-3}$ b. $g(x) = x^2 - 3x - 10$ c. $h(x) = |2x - 3|$

7. Determine whether the Mean Value Theorem can be applied to $f(x) = \frac{1}{3}x^3 - 2x^2 + 5x + 3$ on the closed interval $[0, 3]$. If the MVT can be applied, find all values of c in the open interval $(0, 3)$ that satisfies the MVT.

8. ***Calculator*** - The position of an object is given by $x(t) = \frac{1}{5}(t-2)(t-4)^2(t-5)$ *over* $[0,5]$ in meters/seconds. ***(Round to 3 decimal places)***

a. Show number lines of *v(t)*, and *a(t)* on $[0,5]$

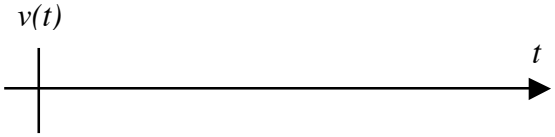

b. Find velocity, acceleration, and speed at $t = 1.8$ seconds.

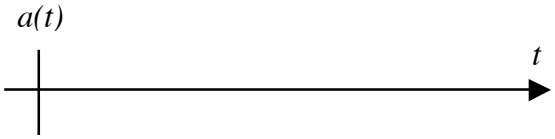

c. Find *t* such that the object is stopped. ***Justify your answer.***

d. For what time interval is the object moving right? ***Justify your answer.***

e. For what time interval is the object speeding up to the right? ***Justify your answer.***

f. Determine the average acceleration of the particle over the interval.
Show your mathematical set-up using function notation.

9. **Evaluate:** $\lim_{x \to 1} \frac{\sin(\pi x)}{x-1}$

10. Given the curve $x^2 + 2xy - 3y^2 = 15$, find the following.

a) Find $\dfrac{dy}{dx}$.

b) Find the <u>equation(s)</u> of the vertical tangents to the graph.

d) Find the rate of change of the slope of the curve at $\left(\sqrt{15}, 0\right)$.

11. ***Non-Calculator*** Boat A is anchored 12 nautical miles east of a light house. Boat B leaves the light house and travels north at 15 knots. How fast is the distance between the two boats changing at $t = .6$ hours? *(1 knot = 1 nautical mile per hour)*

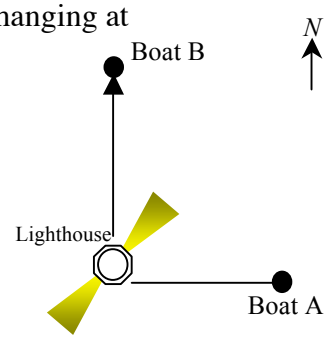

12. The velocity of a particle moving along the x-axis is given by the graph below, over the interval [0, 7]. *Distance is in meters and time is in seconds.*

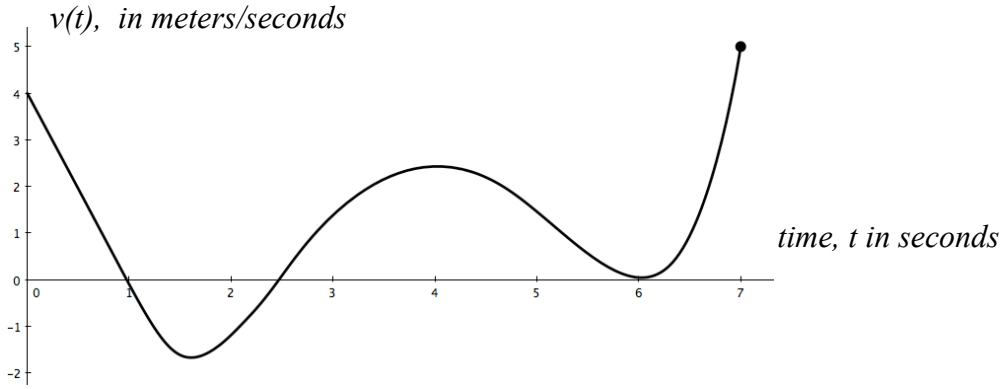

a) **Approximate** the interval(s) in which the particle is moving to the left. ***Justify your answer.***

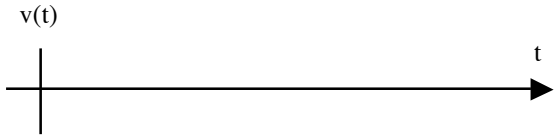

b) Sketch the graph of acceleration over the velocity graph.

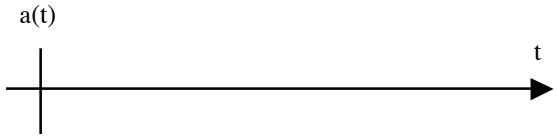

c) When is the speed increasing while the particle is moving to the right? ***Justify your answer.***

d) If $x(2.5)=0$, determine if the particle is to the left or right of the origin at t = 4 sec.

Answers

1. $a(t)=\left(6x^2-4\right)^2\left[36x\cot(5x)-5\left(6x^2-4\right)\csc^2(5x)\right]$ 2. - 0.087 radians per sec

3. 2/3 cm/sec 4. $\frac{3\pi}{8}$ in. 5. a. your sketch b. $V=\frac{\pi}{12}k^3$ c. 2π cu. ft/sec

6. a. Not Continuous over $[-1,4]$ b. Cont. and Diff. over $[-1,4]$ *and* $g(-1)=g(4)$ c. Not Differentiable

7. c = 1 *Exclude c = 3 because f(x) is nondifferentiable at the endpoint.*

8. b. $v(1.8)$ = -3.854 m/sec, $a(1.8)$ =8.176 $m/\sec^2$, speed = 3.854 m/sec

c. 2.557 sec, 4 sec, 4.693 sec d. $(2.557,4)\cup(4.693,5]$ e. $(2.557,\ 3.121)\cup(4.693,\ 5]$

f. A_{AVG} = 7.800 $m/\sec^2$

9. $-\pi$ hole at $(1,-\pi)$

10. a. $\frac{-x-y}{x-3y}$ b. $x=\frac{-3\sqrt{5}}{2}$, $x=\frac{3\sqrt{5}}{2}$ c. $\frac{d^2y}{dx^2}=\frac{4\sqrt{15}}{15}$ 11. 9 knots

12. a. $(1, 2.5)$ because $v(t)<0$ c. $(2.5,4)\cup(6,7]$ because $v(t)<0$ and $v(t)$ is increasing

d. to the right because $v(t)>0$ *over* $(2.5,4)$ $\therefore$ *the particle is moving to the right.*

11. The trough shown in the figure below is 5 feet long, and its vertical cross sections are inverted isosceles triangles with base 2 feet and height 3 feet. Water is being siphoned out of the trough at the rate of 2 cubic feet per minute. At any time t, let h be the depth and V be the volume of water in the trough.

a) Find the volume of water in the trough when it is full.

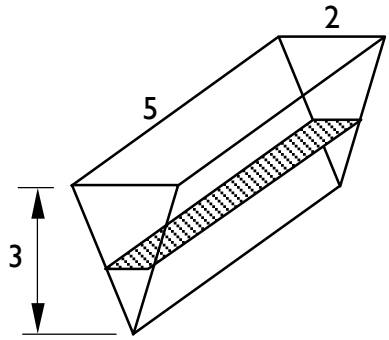

b) What is the rate of change in h at the instant when the trough is $\frac{1}{4}$ full by volume?

c) What is the rate of change in the area of the surface of the water (shaded in the figure) at the instant when the trough is $\frac{1}{4}$ full by volume?